KARTING AUSTRALIA
CIRCUIT REGULATIONS AND GUIDELINES

2026 UPDATE

KARTING AUSTRALIA

KARTING AUSTRALIA

CIRCUIT REGULATIONS and GUIDELINES

Including:

Mandatory Inspection and Licencing Requirements

Safety Prescriptions and Guidelines

Maintenance Recommendation

Australian Karting Association Ltd

T/A Karting Australia

Text in this colour is updated for 2026.

Kelvin O'Reilly
Chief Executive Officer
19 December 2026

Using This Document:

This document contains the Mandatory Inspection and Licencing Requirements, Safety Prescriptions and Guidelines and Maintenance Recommendations (collectively referred to as the "**Requirements")** of the Australian Karting Association Ltd trading as Karting Australia (**KA**) for all KA Licensed bitumen and/or dirt surfaced Sprint Kart Circuits in Australia.

The Requirements are separated into 2 Sections as follows:

Section A: Inspections, Licencing, Maintenance Recommendations and National Safety Framework.

Section B: Circuit Construction and Safety Requirements – New and Existing Circuits.

This document contains Safety Prescriptions, Mandatory Inspection and Circuit Licencing Requirements, all of which are compulsory, Safety Guidelines and Recommendations and Maintenance Recommendations that are highlighted individually as follows for the sake of clarity:

1. **Mandatory Inspection and Licencing Requirements and Safety Prescriptions**

   These are **compulsory requirements** and are shown in bold typeface, yellow highlighted panel.

2. **Safety Guidelines**

   These are non-compulsory guidelines and recommendations that recognise **best practice in Circuit and Track safety for Karting** and that will be referred to by the Circuit Inspector when assessing a Circuit for the issuing or renewal of a KA Circuit Licence and are shown, other than in the Preamble and Definitions sections herein.

3. **Maintenance Recommendations**

   These are actions that are **recommended** be taken prior to and following the use of the Circuit and are shown in background shaded text and surrounded by a solid border.

Preamble:

Karting Australia (KA) is committed to maintaining the highest standards of safety in Australian karting. All participants, officials, and stakeholders are required to actively contribute to the creation and maintenance of a safe environment at all times. Compliance with safety protocols and regulations is mandatory for all individuals involved in Karting Activities, Races and Events under KA's jurisdiction.

These Requirements, established by KA, serve as the standard reference for Clubs when building, modifying and maintaining their Circuit(s) and Circuit Inspectors during the inspection, assessment and licencing of any Circuit.

Circuit Inspectors shall apply their training and professional judgment in evaluating any permitted variations to these Requirements. State Circuit Inspectors are not authorised to approve any deviations from the **Safety Prescriptions and Mandatory Inspection and Licensing Requirements** contained herein unless explicitly approved by KA, and then only in exceptional circumstances.

KA General Rules Chapter 4 – Circuit, Track and General Safety Requirements, requires:

"1. General

a) A Circuit must have been issued with and maintain as current, a Circuit Licence issued by KA or a SKA on behalf of KA for it to hold a Meeting or a Karting Activity.

b) Each Circuit will be assessed and graded for suitability to host a National, State, Zonal or Club level Meeting.

c) A Track must only be used in the direction indicated on the Circuit Licence. The Circuit Licence will be automatically invalidated if a Track is used in a direction or layout not indicated on the Circuit Licence.

d) A Track must conform to the requirements of the KA Circuit Regulations and Guidelines.

e) A Circuit that is not deemed to be fully compliant (in non-critical safety requirements) by the Circuit Inspector may not have its Circuit Licence renewed or may be 'Provisionally Licenced' for a specified period of time to enable completion of Works Orders made by the Circuit Inspector and to enable the Club to reobtain its full Circuit Licence."

"2. Circuit Inspectors and Club Safety Officers

a) Each SKA is to appoint at least one (1) Circuit Inspector whose appointment must be ratified by KA.

b) A Circuit Inspector must be accredited by KA and must have satisfactorily completed a KA approved Circuit Inspector's course on a biennial basis either electronically or in person, in order to retain their Circuit Inspector's accreditation.

c) A State Circuit Inspector will work in conjunction with KA, the National Circuit

Inspector, and the Club Safety Officer/s to ensure that the safety requirements of a Circuit or Course are being maintained.

d) *A Circuit Inspector shall serve as the final authority on determining whether a Circuit or Course is compliant with the Rules and the "Karting Australia Circuit Regulations and Guidelines" and whether a full or provisional Licence can be issued to it. The Club is obligated to maintain the Circuit or Course in compliance with the Rules and "Karting Australia Circuit Regulations and Guidelines", thereby ensuring the highest possible standards of safety for racing and Karting Activities.*

e) *Each Club is to appoint a Club Safety Officer who is responsible for Circuit safety. The Club Safety Officer must successfully complete the KA Club Safety Officer on-line course and examination in the KA Officials Academy by no later than 31 January each year or within one (1) month of being appointed to the position, whichever is the sooner.*

f) *A Club Safety Officer will work in conjunction with the Circuit Inspector to maintain the safety requirements of a Circuit.*

g) *It is recommended that the Club Safety Officer is not a member of the Club Executive."*

Circuit Inspectors are also required to adhere to these Requirements when assessing any temporary Circuit.

KA reserves the right to vary these Requirements at any time, with issues of safety being paramount.

Definitions:

In addition to the definitions contained in the KA National Competition Rules (**Rules**), and Constitution, the following definitions are applicable to these Requirements.

1st Line of Protection (1LoP): *A* barrier erected as a defence to safely restrain the forward movement of a kart that has left the Track & contain the kart within the confines of the 1LoP. A Track will have a 1LoP usually in the form of a mesh fence for its full perimeter.

Barrier: An obstacle (deemed to be impenetrable) used to safely restrain the forward movement of a kart that has left the Track.

Buffer: An energy-absorbing deformable apparatus designed to partially dissipate the kinetic energy of a kart striking the apparatus.

Catch Traps: An area of loose material set into the verge, designed to slow a kart, which has left the Track surface.

Circuit: A closed track, permanent or temporary, beginning and ending at the same point, built or adapted specifically for KA sanctioned Kart activity and including but not limited to the track, in grid and out grid and all the reserved areas designated solely for Officials, Participants, Competitors & Drivers.

Course: A road or track, and the inherent installations, including but not limited to the Circuit, Spectators Areas and Paddock Area, used for Karting Competitions. A course may be temporary or permanent depending on the character of its installations and its availability for competitions.

Corner: A significant change in direction of the Track, generally with a radius to the inside and outside edges.

Kerb: A device located at the Track edge, usually at a corner, designed to prevent Track edge disintegration and to deter karts from driving off the Track.

Paddock: An area within a Course where all Karts entered for a Meeting will be accommodated whilst not Competing during a Meeting and in which work to prepare a Kart for Competition will be undertaken.

Parc Fermé: An area secured by the Organiser for the purpose of isolating and checking Karts for, amongst other things, technical compliance with the Rules. Each Parc Fermé shall be of sufficient size to accommodate all Karts which are to be isolated. It shall be clearly delineated and controlled by officials appointed for that purpose. Only authorised persons are permitted access to the area.

Ripple Strip: A profiled concrete strip on the outside edge of a Track corner, constructed to a specified profile, to deter karts from driving off the Track.

Run-off Area: The area from the edge of the Track to the 1st-Line of Protection.

Security Fence: A fence constructed to prevent the access of all persons to a secure area.

Separation Barrier: Is a barrier or buffer designed to stop karts from short cutting the Track

Spectator Fence: A fence constructed to restrict the access of all persons to a specified area.

Stands and Temporary Structures: All spectator stands, viewing platforms and like structures whether of a temporary or permanent nature, must be approved by the appropriate statutory or regulatory body(ies) charged with the responsibility of approving such structures and thereafter be maintained and repaired so that such structures, at all times, remain in full and strict compliance with the approval conditions as they exist from time to time.

Start Grid or Out Grid: An area set aside from the paddock and Track for the assembly of karts in race order prior to the start of a race. Access restrictions may apply.

Straight: The section of Track between two corners.

Track: A road specifically built or adapted to be used for Karting competitions. A track is defined by the outer edges of the racing surface and is the only route to be used during a Competition.

Track Length: The length of a Track is considered to be that of the centerline of the Track. The centerline of the Track is the median line between the left and right edges of the racing surface of the Track as delineated by the required white or yellow lines and should be measured on site by taking an average of the measurements of the left & right edges.

Weigh-In-Area: Otherwise known as Scales area. An area set aside from the paddock and Track for the assembly of karts at the end of a race prior to being weighed. Access restrictions shall apply.

Works Order: A directive issued for a Circuit specifying works that must be completed within a designated time frame to allow the Circuit to achieve full licensing status.

For a Circuit that does not meet full compliance requirements:

a) the Circuit Licence may not be renewed, or
b) the Circuit may receive a Provisional Licence for a specified period. This provisional status permits the Circuit to continue hosting karting Competitions and Karting Activities while completing required non-critical works.

The Works Order, provided by a Circuit Inspector or mutually agreed upon by the Circuit operator and the Circuit Inspector, details the necessary actions to meet full KA Circuit Licence requirements or other applicable requirements, including stipulated completion dates.

Section A

Inspections, Licencing, Maintenance, Structural Changes and National Safety Framework

1 Circuit Inspections and Licencing

a) The purpose of the inspection of a Circuit and Course undertaken by a Circuit Inspector is to:
   (i) establish compliance with these Requirements and Guidelines using the approved KA Targeted Risk Assessment methodology; and
   (ii) enable each layout variation of the Circuit to be licenced by KA or an SKA on behalf of KA and in accordance with KA Rules; and
   (iii) establish recommendations and work upgrade programs for the Club to undertake that are considered necessary over a period of time to maintain and improve the safety of the Circuit and to ensure the on-going evolution of safety infrastructure at the Circuit; and
   (iv) verifying and/or approving such recommended works programs; and
   (v) verify the conditions and services required for the conduct of National and International Competitions.

b) All KA licenced circuits MUST be inspected a minimum of biennially (every 2 years) from the previous inspection for compliance with these Requirements and to enable the Circuit Licence to be issued/renewed. For the sake of clarity, the maximum period of time between Circuit Inspections must not exceed 24 months.

c) The approval of a Circuit and the granting of a Circuit Licence is conditional on all works required by the Circuit Inspector being undertaken and immediate works satisfactorily completed in accordance with the Works Order.

d) The Club Safety Officer and/or another authorised Club representative must be present at the time of circuit inspections by the relevant Circuit Inspector.

e) All structural or layout changes (Changes) to an existing KA licenced Circuit **MUST BE APPROVED IN WRITING BY A CIRCUIT INSPECTOR BEFORE BEING IMPLEMENTED**.

f) A Circuit that is not considered to be compliant by the Circuit Inspector will not have its Circuit Licence renewed or may be required to comply with Works Orders to maintain its Circuit Licence.

IMPORTANT NOTE:

The Circuit Inspector shall have the exclusive right to review, approve, modify, or reject any proposed Changes to an existing KA licensed Circuit.

The Club requesting Changes must submit detailed plans of the proposed Changes to the Circuit Inspector for review. Following the submission and any necessary site inspection(s), the Circuit Inspector shall issue a written decision regarding the approval or rejection of the proposed changes at the earliest reasonable opportunity.

2 Circuit Maintenance

Proper maintenance of the circuit and its installations is a condition of the Licence; the circuit should be checked not only before an event, but also afterwards, so that the damage can be assessed, and a repair program established. The main items which need regular attention include but are not limited to:

a) Track surface:
   (i) Cleanliness and general condition.

b) Edges, Verges and Lateral Areas:
   (i) All edges, verges and lateral areas should be level with the edge of the track and all areas behind kerbs filled in and level. In all grass covered areas, the grass should be kept trimmed; dry grass and all vegetation should be removed. Vegetation should be removed from gravel

beds. All lateral areas, up to the first line of protection, should be kept clear of any obstruction.

c) Tyre Buffers/Barriers:

(i) Tyre Buffers/Barriers should be checked for tight attachment together using compliant bolting technique.

d) Spectator and 1LoP Fencing:

(i) These fences should be checked regularly for support and tension. The fences should be checked for deterioration.

e) Kerbs:

(i) Kerbs must be painted in two colours alternately (recommended colours: red and white).

(ii) Kerbs should be frequently checked for damage.

(iii) Broken kerbs should be repaired/replaced immediately.

f) Drains and Drainage:

(i) Drains should be cleaned and inspected for correct operation & flush, secured surface grates prior to each event.

g) Circuit Demarcation Lines:

(i) All demarcation lines for Track and Grid areas should be kept clear and clean and preferably repainted annually or prior to major events.

h) Observation and Vision:

(i) Clear vision should be maintained at all times between consecutive Marshals/Observation Posts/Signaling locations etc. Trees or vegetation should be removed, cleared or trimmed to maintain good vision.

i) Communications:

(i) Telephone and other communications should be checked.

3 Club Safety Officers

In accordance with NCR ***General Rules, Chapter 4 Rule 2***:
"Each Club is to appoint a Club Safety officer who is responsible for Circuit Safety.

The Club Safety Officer must successfully complete the KA Club Safety Officer on-line course and examination in the KA Officials Academy by no later than 31 January each year or within one (1) month of being appointed to the position, whichever is the sooner.

A Club Safety Officer will work in conjunction with the Circuit Inspector to maintain the safety requirements of a Circuit."

The functions of a Club Safety Officer are to:

a) Ensure that the Circuit is maintained at all times in accordance with these Circuit Regulations and Guidelines including any requirements made as Works Orders by the Circuit Inspector/s.

b) Ensure that all work orders / logbook reports have been completed or remedied prior to the completion date agreed with the Circuit Inspector.

c) Liaise with the Circuit Inspector.

d) Complete the KA checklist to ensure all work is completed prior to each use of the Circuit.

e) Maintain compliance with WHS regulations.

4. Circuit Inspectors

In accordance with NCR ***General Rules, Chapter 4 Rule 2***:
"Each SKA is to appoint at least one (1) Circuit Inspector whose appointment must be ratified by KA.
A Circuit Inspector must be accredited by KA and must have satisfactorily completed a KA approved Circuit Inspector's course on a biennial basis either electronically or in person, in order to retain their Circuit Inspector's accreditation.

A State Circuit Inspector will work in conjunction with KA, the National Circuit Inspector and the Club Safety Officer/s to ensure that the safety requirements of a Circuit or Course are being maintained.

*A Circuit Inspector shall serve as the final authority on determining whether a Circuit or Course is compliant with the Rules and the "Karting Australia Circuit Regulations and Guidelines". If a Circuit or Course is deemed non-compliant, the Circuit Inspector will specify the remedial actions required (a **Works Order**) to bring the Circuit or Course into compliance. The Club is obligated to maintain the Circuit or Course in full compliance with the Rules and the "Karting Australia Circuit Regulations and Guidelines", thereby ensuring the highest possible standards of safety for racing and Karting Activities."*

The responsibilities and duties of a Circuit Inspector are to:

a) Make inspections of each Circuit a minimum of biennially from the previous inspection, prior to the existing KA Circuit License expiring.

b) Make inspections at the request of KA, the SKA, a Club or Circuit operator.

c) Advise the Club or Circuit operator on required safety improvements and/or Works Orders including, if required, during a Race Meeting in compliance with these Requirements.

d) Communicate official information only to the respective Club or Circuit operator via the SKA Secretary/Administrator and the National Circuit Inspector, when appropriate.

e) Prepare inspection reports in the format required by KA and forward them to the SKA.

f) Liaise with the National Circuit Inspector, and KA.

g) Be the point of final determination (in conjunction with KA where necessary) on whether a Circuit is compliant and if not compliant, what Works Orders are required to achieve compliance.

5. *Event Classification / Inspection by the relevant Circuit Inspector*

a) The KA National Circuit Inspector or their delegate will inspect all host Circuits for National Championship, National Series or National Cup Meetings and confirm Works Order(s) that the relevant Circuit Inspector will oversee to ensure compliance.

b) A final inspection of the host circuit for all other National Level meetings (State Championship) must be completed by the relevant Circuit Inspector at least 1 month prior to the commencement of the relevant race meeting.

c) Host circuits for National Level meetings must be inspected by the relevant Circuit Inspector as and when requested by KA.

6. *Critical Incident Procedure*

a) Critical Incident Procedure is provided in the Official Documentation for events.

b) Critical Incidents must be reported to KA, KA's Insurer and the SKA Secretary/Administrator.

Section B

Circuit Construction and Safety Requirements – New and Existing Circuits.

1. *Circuit Design*

The shape of the Circuit, both in plan and vertical profile, is not constrained by these Requirements, as it is dictated by certain variable factors, the types of competition for which the course is intended, the character of the terrain, considerations of economics, aesthetics, tradition, etc.

The construction of the circuit must conform to all safety requirements specified by KA. Those responsible for a circuit design must also ensure that the prescriptions laid down by the Public Authorities are complied with and must obtain their official approval.

2. *Circuit Plan and Approval*

Prior to the construction of a new circuit or alteration of any existing circuit, all circuits must have a professionally drawn plan at a scale of 1:500 showing the Circuit layout, surface contours, the direction of the racing, kerbs, catch traps, barriers, buffers, buildings, installation, access roads, race areas, the location of the starting grid, breakdown lane, circuit entry / exit, ambulance access and parking, the Medical Center, pickup vehicles and of the Marshals' posts, as well as a Paddock plan with the pit spaces and access ways.

This plan is a key step in the KA New Circuit and Extensions Procedure.

3. Track Density/Maximum Number of Starters

Track Length (Metres)	Track Width at The Narrowest Point		
	6m	7m	8m
<500	20	22	24
500 - 625	22	24	26
626 - 750	24	26	28
751 - 875	28	30	32
876 - 1000	32	34	36
> 1000	NA	38	40

Track Density will be approved on the basis that the Out Grid capacity and In Grid capacity match or exceed the Track density. Lower Track Density may be set based on grid capacity (in/out).

For National Events, KA has the authority to reassess the Track Density of a Circuit based on the results of a full TRA Circuit Inspection conducted by the Safety Risk Management and Compliance Manager in their capacity as National Circuit Inspector and / or the Safety Delegate

4. *Circuit Grading – Indicative Criteria (Unless Otherwise Approved By KA)*

GRADE	EVENT STATUS	CRITERIA
International	CIK/FIA International Event	Refer CIK/FIA Homologation Regulations
A	National Championship National Series National Cup	Circuits to be a minimum length of 750 metres and a minimum width of 7 meters.
B	State Championship	Circuits to be a minimum length of 500 metres and a minimum width of 7 metres.
C	State Series State Cup	Circuits to be a minimum length of 500 metres and a minimum width of 6 metres.
D	Zonal Competition Club Competition Karting Activity	Circuits to be a minimum length of 300 metres and a minimum width of 6 metres.

5. *Track Dimensions and Characteristics*

a) **Length**

(i) The maximum length of any Track will be 1.7km (except as otherwise approved by KA).

b) **Straight**

(i) The length of a straight will be measured from tangent points of the proceeding and following corners.

c) **Start Straight**

(i) The Track should ideally have a minimum distance of 80m from the start line to the start of the first corner and be a minimum length of 130m.

d) **First Corner**

(i) The first corner should be as "open" as possible and a minimum width of 8m.

e) **Width**

(i) Straights over 80m in length should have a minimum width of eight (8) metres; elsewhere the minimum width is 7 metres.

(ii) For existing Circuits, heritage dispensation is possible with a minimum requirement that straights over 80m in length are to be minimum width of 7 metres; elsewhere the minimum width is 6 metres.

(iii) Track widths will be measured over the sealed racing surface, excluding any kerbs or ripple strips & delineated by the required white or yellow lines.

f) **Separation**

(i) The distance between high-speed converging sections of Track shall be a minimum of twenty (20) metres between Track edges unless the National Circuit Inspector approves an alternative.

(ii) All other sections of the Track shall have a minimum of fourteen (14) metres separation, apart from the area around the internal radius of any corner.

g) **Track Gradient**

(i) The recommended maximum longitudinal gradient is 5% and recommended maximum transverse gradient is 10%.

h) **Vertical Clearance**

(i) There shall be no permanent or temporary objects within a height of 3 metres vertically above the Track surface.

6. *Safety Features*

(a) Surface:

(i) The racing surface of sealed Tracks will be sealed with bitumen / concrete. The surface of dirt Tracks may be either dirt or a combination of dirt / concrete / bitumen.

(ii) The surface must be smooth and continuous and have sufficient fall to prevent formation of puddles in wet conditions (a minimum of 2.5% being recommended).

(iii) Where practical, the Track surface levels should follow the natural contours. Verges should be graded level with the Track for a distance of 10 metres from the Track edge.

(iv) Important Note: severe positive camber on corners can have a launching ramp effect and should be avoided.

(v) Both edges of the Track surface will be defined with a 100mm wide white or yellow line.

b) **CIK Starting Grid:**

The Track must be marked in accordance with the CIK Circuit Starting Grid marking requirements as detailed in the drawing contained in Appendix A to these Requirements. The CIK Starting Grid markings will commence no earlier than the end of the last corner before the Start Line.

c) Baulk Line:

The Circuit must have a bright green coloured line painted across the Out-Grid Lane a minimum of 5 metres back from the track edge (or appropriate to suit local conditions with approval of Circuit Inspector).

d) Start Line:

A white line painted across the Track at 90 degrees to the Track edge, which may also be the finish line.

e) Finish Line (also called Control Line):

A white line painted across the Track at 90 degrees to the Track edge, at the crossing of which by a Kart, timing or other performance criteria are determined.

f) Formation Line:

A red line painted across the Track at 90 degrees to the Track edge, on a straight section of Track prior to the final corner before the Control Line – position to be determined by the Circuit Inspector.

g) Breakdown Lane:

(i) Where a mechanical breakdown lane is provided it shall be adjacent to the main Track with entry via a deceleration lane from the Track to the Breakdown Lane.

(ii) There must be a chicane in the deceleration lane prior to the breakdown lane aimed at substantially reducing the speed of karts entering the breakdown lane.

(iii) The sealed width of the deceleration lane must be a minimum of 1.5 metres and a maximum of 2.5m.

(iv) The sealed width of the stopping area of the breakdown lane must be a minimum of 3.0 metres and separated from the racing surface by a barrier or buffer.

(v) A Breakdown Lane shall be compulsory at National Championship Events.

h) Track Edges, Verges and Run-Off Areas:

(i) The Track must be bordered all along its length on both sides by compact verges having an even surface.

(ii) The verges must be free of debris or gravel and must normally be grass-covered over a minimum width of 1.0 metres.

(iii) The verges must be continuation of the transverse profile of the Track, with no step between Track edge and verge. Any horizontal transition must be very gradual and progressive.

(iv) In high-erosion areas, Verges may be stabilised by a method **agreed to by the Circuit Inspector**, including methods such as binding agents and compression, ~~grasscrete, suitable plastic grating that is not a puncture risk~~ or plastic gridding (example in h) (v) below) or pavers (example in h) (vi) below) and kart tyres (rear tyres only) set down into the ground, with the sidewalls horizontal in accordance with h) (vii) below.

(v) Geohex Erosion Control system from Richmond Rolling Solutions is an effective plastic erosion control grid. Ground must be excavated to allow set down of gridding into surface, so that to of gridding is level with surrounding ground. Gridding needs to be pegged down and filled – ideally with loamy soil that can be watered in, compacted and seeded with grass. Speak to the Circuit Inspector for details and contacts.

(vi) "Turfgrid" pavers from Adbri Masonry are a good method of verge stabilisation, particular in locations with hard ground or low rainfall. The ground needs to be excavated with pavers set in and filled around the pavers with loamy soil to a level 1-1.5cm below the top of the pavers, with the top of the pavers flush with surrounding verge areas. Speak to the Circuit Inspector for details and contacts.

(vii) Kart tyres used for stabilisation MUST be held together in groups of four by galvanized metal strapping under the tyres, attached to the tyres by fasteners such as tech screws, with the threaded section facing down and the tyres must be filled by compressed soil or another suitable material offering no or little compression that is agreed to by the Circuit Inspector & the top horizontal sidewall to be flush with the verge.

(viii) A run-off area is that section of ground between the verge and the first line of protection and unless otherwise specified, must have the same basic characteristics as the verge, although it may be less stabilised.

(ix) The run-off area must be graded to the verge. If there is a negative slope, this must not exceed 5% for a distance of 10 metres from the Track edge; if there is a positive slope, this must not exceed 10% for a distance of 10 metres from the Track edge, with a smooth transition from Track to run-off area.

i) Corners:

(i) Kerbs must be laid on the inside of corners to prevent karts moving onto the inside verge of corners in normal racing.

j) Kerbs On the Outside of Corners (also referred to as ripple strips):

(i) Are to be a minimum 300mm wide and a maximum of 1500mm wide.

(ii) The surface may be rippled.

(iii) They will be sloped at a negative angle to the plane of the Track and a maximum of 5 degrees.

(iv) The CIK Style ripple strip is to be used. (Refer to CIK Ripple Strip drawing in Appendix A to this document).

k) Kerbs On the Inside of Corners (also referred to as apex kerbs):

(i) Are to be a minimum 300mm wide OR compliant with the CIK Kerb design in Appendix A

(ii) Their surface must be smooth.

(iii) Their surface must form a positive angle to the plane of the Track being a minimum of 15 degrees and maximum of 20 degrees (equivalent to 80mm to 110mm rise measured at the kerb extremity, for a 300mm wide kerb).

(iv) It is recommended that the drainage slots be inserted in apex kerbs.

(v) The adjacent verge will be finished level with the top of the kerb.

7. Locating Safety Structures

The primary and optimal form of protection for karts is to ensure suitable run off distances are provided between the edge of the Track and any solid, non-compressible object (such as a post, pylon, or steel stanchion as examples). Wherever possible, the minimum distance from the Track edge to a solid, non-compressible object should be ten (10) metres from the Track edge & additional Safety Structures will be needed if the distance is less than that due to limited or no possibility of relocating the solid, incompressible object.

a) Separation barriers and/or catch traps must be installed to prevent karts crossing to other Track sections in any area where two sections of Track are close to each other and/or there is a possibility that karts may cross.

b) Solid, incompressible objects should be removed from the Track area where possible. If this is not possible, then suitable run off distance and protection is required.

c) Any structure or solid object of any type must have barriers or buffers and where appropriate catch traps to protect competitors.

Safety Structures

(a) Buffers

(i) Shall be designed to absorb the energy from impact with a kart and to rapidly decelerate an out-of-control kart with minimum damage to both kart and driver. Wherever possible, buffers are to be a minimum of four (4) metres from the edge of the Track and have verge and/or catch trap protection prior to where they are located. Tyre Buffers

- The tyre buffers must be constructed of similar size automotive or racecar tyres (no commercial or 4wd tyres) securely bound / fixed in vertical stacks and longitudinally in a manner that forms a flexible structure.
- Tyre buffers are constructed to a minimum of 600mm in height unless otherwise directed. The tyre wall must curve away at the end of the buffer.
- Traffic side of Tyre Buffer must be cleaned of all markings via pressure washing, and may optionally be painted White, or such other optically obvious colour as approved by the Circuit Inspector OR:
- Traffic side of the Tyre Buffer may optionally have a PVC woven mesh banner with a backing liner, 600 high and generally 6m long affixed by screws through eyelets in the banner. The banner can be plain or printed with sponsors, event names or similar.
    - Utopia DB60 Mesh Banner from Graphic Art Mart is an example of suitable banner material. NB: such banners would normally need to be replaced annually due to UV.
- Buffers at a refuge point MUST be either painted or have a banner affixed, so that they are easily visible to competitors.
- Tyres must be affixed together to form tyre stacks and buffer sections of four stacks in length.
- Unless an alternative fixing method is approved by the Circuit Inspector, and then only on a temporary transitional basis, TEK screws and/or Bolts must be used to affix the tyres together to form each buffer section. Washers must be used on bolts or Tek screws on each side of the tyre wall.
- When using Tek screws a suitable "speed nut" must be fitted to the thread end. Bolt or screw ends must not protrude from the outside face of the completed buffer. The buffers must not be attached to the ground so they can move freely when contacted by a kart. Tyres must be in good condition.
- Tyres may have holes drilled in their bases to drain water.

(ii) Tecpro® Barriers

- Tecpro® barriers are low-wall protections made of polyethylene, hollow on the inside, linked together by double nylon straps and tensioned by ratchet systems.
- Tecpro kart barriers use the same patented tension technology used by the Tecpro barriers for F1.
- Tecpro kart barriers may be either "Normal" – hollow or "Foamed" – factory filled with foam.
- Tecpro barriers can be shaped to match any curves and turns on a Track.
- OEM Tecpro nylon straps, fixation plates, pillar protection, ratchets should be used to install Tecpro barriers on a Track.
- Barriers should be installed in accordance with Tecpro manufacturer's instructions.
- To maintain structural integrity, no screws or holes should be drilled into a Tecpro barrier.
- Tecpro barriers must not be used at a flag or refuge point.
- Tecpro barrier installations MUST be individually approved by KA.

(iii) Plastic Barrels

- Plastic barrels may only be used as a buffer if specifically approved by the Circuit Inspector.
- They must not be used at a flag point or refuge.
- They may be used in suitable locations at the discretion of the Circuit Inspector.
- The barrels must be parallel-sided deformable UV resistant plastic with minimum size of 600mm diameter x 900mm high.
- All barrels must have holes drilled in their base to drain water.
- The barrels must be bolted together at the top and bottom, in groups of five barrels.
- The barrels on the end of each group of five barrels must be filled with a maximum of 100mm of crushed stone as ballast.
- Each barrel in a group of five barrels must be attached to the adjoining barrel(s) using one of the fixing methods identified in 7 (a) (vii) of these Requirements. They must only be used in an upright position.

(iv) Alternatives

- Buffers may be constructed of alternate material provided the materials and construction methods have been approved by KA.

(v) Separation

- Buffers must be separated by a minimum of 300mm from any solid object or other safety structure.

(vi) Belting

- May be used to supply a continuous belting face to buffers in areas with risk of frequent or higher speed impact. Minimum height to be that of the buffer being belted, minimum thickness 5mm.

(vii) Fixings

- TEK screws will be a minimum of 4mm diameter with 25mm diameter washers on each side of the fixing and a "speed nut" fitted to the end of the thread.
- Bolts will be a minimum of 4mm diameter with 25mm diameter washer each side of the fixing and locating nuts fitted to the end of the thread.
- Facings or Belting to be secured with minimum 6mm dome headed bolt with washers and nuts internally only, or alternatively TEK screws of 4mm diameter with 25mm diameter washers and "speed nuts" used internally, to be fixed on every second tyre stack near the top.

(viii) Buffers may be used in the following locations:

- For separation between sections of Track. Separation Buffers are constructed to be a minimum of 600mm in height and by 4 stacks long, unless otherwise directed by the Circuit Inspector.
- In high-speed run-off areas, as protection before a barrier.
- For the protection of all Trackside Officials posts including flag points and refuges, a double tyre buffer will be constructed with a minimum height of ~~720mm~~ 600mm and a minimum length of 3 stacks with a 300mm separation. All tyres to be bolted together as per 7 (a) (vii).
- Traffic side of tyre barrier at posts should be painted WHITE or such other optically obvious colour as approved by the Circuit Inspector OR be covered by PVC woven mesh as per 8 (a) (i) above (different colour ~~preferred~~ required to remainder of Buffers).

(b) Catch Traps

Catch Traps are an area of loose material designed to slow a kart, which has left the Track surface, before it impacts a buffer or barrier.

(i) The Preferred design of a Catch Trap is:

- A bed of gravel a minimum of two metres wide and a minimum of 250mm deep;
- The top surface of the Catch Trap should be flush with the surrounding ground
  - they should neither be located below the track level nor be preceded by a heightened verge, even slightly heightened in relation to the level of the track surface.

(ii) If a Circuit is unable to be excavated to a depth of 250mm due to geological features such a (immovable) rock formations, then a suitable secondary method may be approved by the National Circuit Inspector.

(iii) The stone to be used shall be round river stone of a single size 5 – 10mm. The Circuit Inspector may seek approval from KA for another type of primarily round stone only to be used if round river stone is not readily available in a Circuit's immediate location. Some examples (indicative only):

(iv) The Circuit Inspector will decide if the surface of the trap is to be smooth and sloping up from the Track or deeply raked up into ridges approximately 100mm deep and 200mm apart. (A correctly prepared gravel trap should be difficult to walk on.)

(v) In high-speed run-off areas, the Circuit Inspector may require the width of the Catch Trap to be increased to a minimum of 4 metres.

(vi) The catch trap must be graded to the verge or Track surface. If there is a negative slope, this must not exceed 5% for a distance of 10 metres from the Track edge; if there is a positive slope, this must not exceed 10% for a distance of 10 metres from the Track edge, with a smooth transition from Track to run-off area.

(vii) Locations

- In front of buffers in high-speed areas, and
- In all areas deemed necessary by the CircuitInspector.

(ix) Pre-2024 Catch Traps

- Catch Traps composed of stone material installed before January 1st, 2024, that do not use the round river stone specified in Clause 8(b)(iii), may be subject to additional requirements or future Works Orders. Such Catch Traps must be approved by the National Circuit Inspector or their delegate.

(x) On a regular basis, the stone in the Catch Trap must be ploughed and loosened to maintain its effectiveness. There should be no vegetation growing in a Catch Trap.

Important Note: The use of woodchips in catch traps is no longer permitted.

(c) Barrier

An obstacle (deemed to be impenetrable and have minimal crushability) serving to bar the passage of a kart– generally the 1LoP.

Note: On new circuits and alterations to existing circuits, it is preferable to provide adequate run-off areas rather than to rely upon barriers alone to control karts.

Construction (fencing)

(i) A 50mm square x 2.5mm diameter chain wire fence with steel rails, or a heavy wire or cable along the top, and a heavy wire or cable along the bottom. Fencing shall be installed to manufactures recommendations.

(ii) A minimum height of 1.15 or 1.8 metres as decided by the Circuit Inspector depending on the location of the Barrier.

Construction (Tyres)

(i) Inside the 1LoP or on the Track infield, Barriers are usually constructed of tyres, to the same requirements as Tyre Buffers, as detailed in 8 (a) (i) above.

(ii) When used as a separation Barrier and if the Circuit Inspector deems suitable, Tyre Buffers may be 300mm high, to improve visibility through corners whilst slowing or stopping a kart impacting.

Location

(i) A Barrier will normally be located in high-speed run-off areas.

(ii) A Barrier will be located at the maximum distance possible from the outside edge of the Track.

(iii) The placement of barriers at each circuit shall be determined by the Circuit Inspector. If deemed necessary, the assessment may also involve the National Circuit Inspector to ensure the optimal solution for the specific location.

(d) First Line of Protection (1LoP)

The 1LoP is used to separate and delineate the controlled racing area and maximise the protection of people such as spectators.

The Circuit must have a 1LoP for the full perimeter of the Track. Gates may be provided but these must be able to be locked. Gates must only swing inwards.

(i) As a minimum, a 1LoP will be 1.15 metres in height above the adjacent ground levels. In some locations, 1.8 metres height may be preferable at the discretion of the Circuit Inspector.

(ii) It will be constructed from heavy galvanised wire with a 2.5mm high tensile tensioned top wire and a lower panel ideally of "cyclone" mesh or at least a minimum of 6/90/30 hinge joint fencing from 2.5mm wire. Fencing shall be installed to manufacture's recommendations.

(iii) The maximum spacing of posts will be three (3) metres with corner braces and strainers as recommended by the manufacturer.

(iv) Minimum post specification will be 75mm diameter CCA treated timber or 48mm OD galvanised steel tubular posts and must be capped.

- Note: "Star Picket" style 3 cornered posts are not suitable for 1LoP use.

(v) The wire mesh must be installed on the Trackside of any supporting posts.

(vi) The location of the **1LoP** will be assessed by the Circuit Inspector and, when considered necessary by them, the National Circuit Inspector for each Circuit to deliver the optimum solution for that specific location but a minimum distance of 10 metres from the outside edge of the Track is the usual requirement.

(e) Spectator Fence

A Spectator Fence is used to control the access of spectators and unauthorised persons into dangerous or controlled areas and to maintain a separation from 1LoP and barriers at all Circuits.

The Circuit must have a Spectator Fence for all public areas of the Circuit. Gates may be provided but these must be able to be locked. Gates must only swing inwards.

(i) The Spectator Fence must be a minimum height of 0.9 metres and be a minimum of five (5) 2.5mm

wire strands evenly spaced over the entire height of the fence.

(ii) Support posts must have a maximum spacing of three metres.

(iii) A spectator fence is to have warning signs attached to it at key locations identified by the Circuit Inspector stating: "KEEP OUT – PROHIBITED AREA".

(iv) The spectator fence should be set back a minimum of 0.8 metres from any 1LoP or Barrier.

(v) "Star Picket" style 3 edge posts are permitted for Spectator Fence but MUST be capped.

(f) Security Fence

A fence erected to define and maintain a secure area such as parc fermé. It may be permanent or temporary.

The fence will normally be 1.8 to 2.4 metres high chain wire supported on posts.

8. Fire Extinguishers

(a) Fire Extinguishers are to be located at the following positions.

(i) At the weigh in scales and at least four other accessible points in the paddock area for meetings with up to 200 entrants plus one additional extinguisher for each 100 (or part thereof) entrants.

(ii) For National Championships, fire extinguishers are to be located at the scales, start grid and four accessible points in the paddock area.

(iii) At any fuel dispensing area, if in use.

(iv) At any fuel testing area, if in use.

(v) At all flag points / signalling light points.

(b) Fire extinguishers to be of a type suitable for flammable liquid fire and be non-hazardous to humans. Minimum 2.5kg and must have current certification tag.

(c) Notices for fire extinguishers, 300mm by 450mm, with lettering compliant with AS 2444 - 1995, are to be located with the bottom of the sign, minimum 2.0 metres above the ground at all locations in the Parc Fermé/Paddock area, exceptions being the scale area and the fuel dispensing / testing areas.

(d) Notices for fire extinguishers, 300mm by 450mm, with lettering compliant with AS 2444 - 1995, are to be located as high as possible on the outside of existing structure at all flag / signalling light points.

(e) Entrants may be required to supply an approved filled fire extinguisher with a current certification tag in their paddock space, but the presence of such extinguisher shall not relieve the organisers of the obligation to supply adequate firefighting equipment for the circuit as a whole.

9. Circuit Lighting (Required for Night Racing and Karting Activity):

(a) Out Grid, In Grid, Parc Ferme and Weigh Area

(i) Must be such that no shadows are cast, which may be a danger to competitors and pit crews whilst starting or retrieving karts.

(b) Paddock

(i) Must be adequate for competitors and pit crew to move around the paddock without endangering themselves by objects hidden in shadows.

(c) Track

(i) No point of the Track surface will measure less than 15 Lux for existing light installations.

(ii) New lighting installations will have a minimum average of 55 Lux with no point of the Track surface to measure less than 21 Lux. It is recommended that new installations aim for 100 Lux average where suitable.

(iii) Track lighting is to be measured at ground level on the centre line of the Track.

(iv) No section of Track surface will have its intensity of lighting vary by more than 20% over a 5 m distance.

(v) No lighting source shall cause glare to drivers or officials.

(vi) All new Track lighting must be designed by a qualified person.

(d) Emergency Circuit Lighting

(i) A Circuit must have emergency lighting that stays on in the event of failure of the main lights & must comply with relevant government & industry regulatory requirements.

(ii) The emergency lighting will have an alternate source of power supply to that which powers the main Track lighting.

(iii) The emergency lighting will be permanently on during racing.

(iv) The minimum number of emergency lights will be one (1) light for every two hundred metres of Track & at least one (1) light at the In Grid.

(v) Positioning of the emergency lights will be at the discretion of the Circuit Inspector.

10. Safety Control Lights

(a) Where a Club elects to install Safety Control Lights (Static and Flashing Red, Yellow, Green and Blue Lights to augment or replace flag signals) the following minimum requirements will apply to such lights, structures and installations.

(b) It is preferrable that the lights used are LED lights which shall be a minimum of 200 square centimeters in area.

(i) Alternately incandescent lights which shall be a minimum of 150mm diameter.

(c) They will be mounted no more than 2 metres high from ground level, unless over the Track surface where Requirement 5 (h) applies.

(d) All lights must be capable of being controlled from a central point.

(i) Green and Yellow lights shall be independently switched and be capable of full course operation – Static and Flashing.

(ii) Blue shall be independently switched – Flashing.

(iii) Red Lights shall be full course operation – Static and Flashing.

(e) For control, the Lights may be either hard wired or capable of being controlled by Wi-Fi.

(f) The Lights may be mains either powered or battery powered.

(i) All cabling must be either underground or around fence lines and must comply with relevant electrical codes.

(g) The positioning, construction and number positions of lights is to be decided in consultation with the Circuit Inspector.

11. Paddock Area

(a) The paddock must be clearly defined and fenced. Under most conditions the public are permitted in the paddock. All karts shall be accommodated within the paddock area. The paddock must be of sufficient area to cater for the maximum number of Competitors likely to attend a race meeting.

(b) The paddock area surface is to be of a suitable material, graded and drained to maintain access during all weather conditions.

(c) The access ways to paddock spaces are to be a minimum width of 3 metres.

(d) A trade area is to be set aside for exclusive use of Trade Outlets that have made arrangements with the Club/Promoter of an Event.

(e) The Club, in conjunction with the Circuit Inspector, may designate a safe area for the starting of kart engines. This area will be clearly marked and sign posted.

(f) The Circuit must have a main notice board that will be in the Paddock area. It will be used to display all official communications and race information to Competitors and Officials. It is recommended that the noticeboard be lockable and protected from the weather. The Notice Board is to have a map showing:

(i) emergency vehicle access routes

(ii) fire extinguishers

(iii) parc fermé boundary

(iv) paddock boundary

(v) emergency phone numbers

(vi) kart engine starting area

12. Out-Grid (Start Grid) and In Grid (Weigh Grid)

The entrance and exit to and from the Track must be clearly defined “OUT” on the Out Grid (or Start Grid) and “IN” on the In Grid (or Weigh Grid.)

The direction of racing and practice is to be displayed by an arrow sign. The location of the sign is to be determined by the Circuit Inspector.

(a) Out Grid (or Start Grid) Area

(i) Must be large enough to accommodate the maximum number of starters permitted on the Track.

(ii) The kart positions on the grid are to be clearly marked in a Herringbone design as per the grid layout diagram in Appendix A of these Requirements.

(iii) The grid surface is to be smooth bitumen sealed or concrete and well maintained.

(iv) The lane to the Track must be fitted with a suitable gate of strength at least equivalent to the adjacent fence. It must be protected from swinging back into the Start Grid during all on-track sessions and Races.

(v) The sealed width of the lane to the Track must be a minimum of 5m and the width between safety structures must be a minimum of 7.5 metres.

(vi) The minimum grid surface width is 8.5 metres.

(vii) Circuits with an existing minimum grid surface width less than 8.5 metres can seek approval from KA for a revised Herringbone layout by providing drawings of the proposed layout to the relevant Circuit Inspector.

(viii) Circuits seeking approval for a revised layout must respect the 2.5m centre lane.

(ix) As a minimum both sides of the start grid must be enclosed with a spectator fence spaced at a minimum of 8.5 metres for a Herringbone grid unless a revised layout has been approved.

(x) A Herringbone grid must be used for all karts when a clutch is fitted.

(b) Weigh In Area (otherwise known as Scales Area)

(i) The weigh in area must be fenced to prevent entry of unauthorised personnel. As a minimum a Spectator Fence will be used.

(ii) Scales are to be located at the end of the weigh in area away from the Track.

(iii) The surface is to be bitumen sealed or concrete and to be of sufficient area to accommodate the maximum grid capacity. (i.e. allowing 4.0 m^2 per kart)

(iv) Access to the weigh in area will be by way of a deceleration lane. The sealed width of the deceleration lane must be a minimum of 1.5 m and a maximum of 2.5 m with an overall clear width of 3.0 m.

(v) The deceleration lane will include suitable bends or a tyre chicane to slow the travel of karts. The weigh in area should be protected from an out-of-control kart by a Tyre Buffer acting as a Barrier.

(vi) An entry lane to the deceleration lane may be painted on the Track.

13. Parc Fermé Area

(a) The parc fermé may include the start grid area, the weigh in area and the weigh scales, an area for impounding karts for technical checking and any tyre or fuel impound area.

(b) The parc fermé must be clearly defined and fenced and the public is not permitted in the parc fermé. Appropriate Spectator or Security Fences will define the parc fermé areas. No smoking is permitted in this area and this direction must be clearly signposted.

14. Emergency Communication

(a) A telephone must be provided at all circuits.

(b) A mobile phone will be sufficient where reception can be achieved.

(c) Where telephone reception is not available, radio contact with emergency authorities must be in place during the Competition.

15. First Aid ~~Medical~~ Facilities

Clubs are encouraged to meet standards higher than the minimum requirements for their facilities as specified in General rules Chapter 6 Rule 3.

(a) Unless otherwise approved by Karting Australia, and then only in exceptional circumstances, a ~~Medical~~ First Aid Facility must be provided at each Circuit.

(i) It may be a permanent or a temporary building or an ambulance or a vehicle commercially equipped to the standard of an ambulance.

(ii) It must be readily accessible from the Track and have ready access to public roads for subsequent transport of patients to hospital if required and appropriate.

(iii) It must be so situated to ensure security and privacy.

(b) The Medical Facility should be so constructed that patients on stretchers can be readily taken into and out of it and must contain adequate space and equipment for further assessment, treatment, stabilisation, and preparation of the patient for transport.

(c) The Medical Facility should be able to accommodate non-ambulatory patients.

(d) ~~It is intended that~~ By no later than 31 December 2025, Unless otherwise approved by KA, effective as of 1 January 2026 all KA licenced Circuits will have a permanent or temporary building or a dedicated section of a permanent building, that complies with Rules 3 b) (i), (ii), and (iii) that is fully operational as their Medical Facility and is available for all Events. The building should include climate control appropriate to the location and environment, appropriate lighting and hot water.

(e) Communications

(i) Communication facilities must include radio communication with the trackside and with Race Control.

(ii) A telephone (landline or mobile with normally adequate 4G signal strength) for contact with the receiving hospital is necessary.

16. Stewards Meeting Room/s:

(a) All circuits will have an enclosed facility for conducting Stewards hearings. The room should be weatherproof and provided with power. Artificial lighting must be provided.

(b) There should be a board in the Stewards' room displaying a facility map showing:

(i) Fire extinguisher locations

(ii) Parc fermé boundary

(iii) Paddock boundary

(iv) Emergency phone numbers

(v) Kart engine starting area/areas.

(vi) Sensor device area

(vii) Circuit layout

17. Race Control:

(a) It is recommended that any Race Control be adequately covered, closed and ventilated with access by way of a permanent stairway if elevated.

(b) This area is to be considered out of bounds except for essential race day Officials or their delegated messengers.

18. Fuel Testing Facilities:

(a) All buildings, including portable structures such as shipping containers, which are used for the purpose of fuel testing, must have an adequate Fresh Air Ventilation System (flow through or exhaust system) and fire extinguishers - Refer clause 9.

19. Scrutineering (Technical Inspection) Area:

(a) Enclosed and covered facilities with adequate lighting and suitable benches are to be provided for Engine Measuring and Fuel Testing.

(b) An adequate secured area for the impounding of karts, tyres, fuel, etc. is required for all State and National Championships and other events as required by KA.

20. Sensor Devices:

(a) Pick up / sender / sensor devices are not permitted inside the 1LoP unless in an approved designated area.

21. Amenities:

(a) Toilet and canteen facilities are to comply with Local Council regulations.

(b) The design and maintenance of all facilities should be such to ensure that the safety of spectators and competitors is paramount.

(c) Paths and trafficable surfaces should be even and non-slip.

(d) Electrical and communication wires should be under ground or strung on poles and any hazardous areas isolated.

(e) All new Courses must have a toilet that is accessible for disabled persons.

22. Parking:

(a) The Course must have a designated parking area for competitors, officials and spectators.

(b) The Course must have a designated area, outside the fenced-in-Track area, for the storage of Track maintenance equipment and the parking of service vehicles.

(c) The Circuit must have a designated area for parking an ambulance or paramedic and pick up vehicles. this area must be positioned so as not to cause a hazard for competitors or officials. If necessary, a safety barrier must be constructed.

23. Lightning Strike & Thunderstorm Safe Shelters - Refer General Rules, Chapter 4, Rule 22 & Appendix 8

(a) Each Club must conduct a Targeted Risk Assessment of their Circuit in regard to potential for lightning strikes, the consequences of lightning strikes, procedures for dealing with lightning strikes and mitigation measures to manage risk (specific guidance is provided in KARM Advanced).

b) It is recommended that each Club based on the outcome of the TRA consider installing mitigation measures.

c) The TRA and mitigation measures taken, must be available for a Circuit Inspector to view and check, along with any certification and testing documents for the mitigation measures taken. A Circuit Inspector may require the installation of mitigation measures at a Circuit in geographic risk zones.

d) Mitigation measures should be identified with a certified electrical contractor and are likely to include such items as protection systems for electrically sensitive locations such as Race Control (timing, lights) and Canteen (temperature regulated food).

e) In consultation with a certified electrical contractor, existing structures that are identified to not be protected from lightning (such as Out Grid roofing) can have mitigation measures applied that enable those structures to be or become Lightning Safe Shelters in the event of lightning strikes. In most cases, those mitigation measures include the following four core components, all to only be installed by a certified electrical contractor:

I. Air Terminals (**Lighting Rods**) are metal rods fixed to the highest points of a structure and their role is to attract a lightning strike (rather than the existing structure) and provide a preferred point of contact.

II. **Down Conductors** are heavy electrical cables or strips connected to a Lightning Rod that run down the outside of the structure being protected and carry the lightning energy safely from the top of the structure to the ground.

III. **Grounding Systems** are metal rods, plates or mesh buried in the ground and connected to the Down Conductors, that safely disperse the electrical energy from lighting into the ground, to prevent injury, fire or equipment damage.

IV. Any structure with mitigation measures in place MUST have ***"Lightning Safe Shelter"*** signs placed in prominent locations to indicate that it is a ***Lightning Safe Shelter*** point.

V. The following diagram illustrates how the mitigation measures work together:

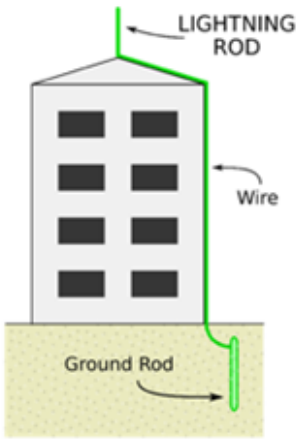

24. Official Signage (artwork for signs is available [via this link to the KA website])

Warning Sign must be positioned at main entry to the Circuit and at the entrance to the Out Grid.

Warning Sign - Landscape **Must measure at least 1.8 metres x 1.2 metres in size** **Either Landscape or Portrait style signs can be used.** **NOTE: Artwork is at 50% size – signwriter needs to increase to 100% before printing to ensure QR code works.** **All states Except Victoria**	 Code of Conduct **WARNING** **Kart Racing Is Dangerous** **Terms and Conditions of Entry** By entering this venue, you agree to comply with Karting Australia's policies, including its **Code of Conduct**, which applies to all entrants. Failure to comply with the Code of Conduct (available on KA's website or via the above QR Code) may result in, among other things, removal from this venue as well as temporary or permanent bans from attending Karting Activities or race Meetings. Australian Karting Association Ltd. T/A Karting Australia and its affiliates ("**KA**") is in the business of providing recreational services that relate to the sport of go karting, including official and private practice, come and try days, demonstrations, displays and race competition ("**Business**"). By entering the Venue any Attendee is at risk of death or of suffering personal injury (both physical and psychological) or loss and damage to property ("**Harm**") arising from KA conducting its Business. Each Attendee releases and indemnifies KA and holds it harmless with respect to all liability for death, personal injury and all other loss and damage, including damage to property howsoever arising, except to the extent prohibited by law. The Attendee voluntarily entered the Venue at its own risk and knows that go karting is a potentially dangerous activity. Affiliates of KA include, but are not limited to its Member States (organisations including Karting Australia (New South Wales) Inc, Karting (WA) Inc, Victorian Karting Association Inc, Australian Karting Association (SA) Inc, Karting Tasmania Inc, Australian Karting Association (NT) Inc, Australian Karting Association Queensland T/A Karting Queensland), Clubs, Individual Members, Affiliate Members, Life Members, committee members, trustees, license holders, officials, instructors/coaches, employees and volunteer workers, the CEO, the Board and Management of KA, promoters, organisers, sponsors, owners, contractors, lessees and licensees of the land, and respective servants and agents.
Warning Sign - Landscape Victoria **Note: there is additional wording for Victoria only that is a State Government requirement.** Must measure at least 1.8 metres x 1.2 metres in size Either Landscape or Portrait style signs can be used. **NOTE: Artwork is at 50% size – signwriter needs to increase to 100% before printing to ensure QR code works.**	 Code of Conduct **WARNING** **Kart Racing Is Dangerous** **Terms and Conditions of Entry** By entering this venue, you agree to comply with Karting Australia's policies, including its **Code of Conduct**, which applies to all entrants. Failure to comply with the Code of Conduct (available on KA's website or via the above QR Code) may result in, among other things, removal from this venue as well as temporary or permanent bans from attending Karting Activities or race Meetings. Australian Karting Association Ltd. T/A Karting Australia and its affiliates ("**KA**") is in the business of providing recreational services that relate to the sport of go karting, including official and private practice, come and try days, demonstrations, displays and race competition ("**Business**"). By entering the Venue any Attendee is at risk of death or of suffering personal injury (both physical and psychological) or loss and damage to property ("**Harm**") arising from KA conducting its Business. Each Attendee releases and indemnifies KA and holds it harmless with respect to all liability for death, personal injury and all other loss and damage, including damage to property howsoever arising, except to the extent prohibited by law. The Attendee voluntarily entered the Venue at its own risk and knows that go karting is a potentially dangerous activity. Affiliates of KA include, but are not limited to its Member States (organisations including Karting Australia (New South Wales) Inc, Karting (WA) Inc, Victorian Karting Association Inc, Australian Karting Association (SA) Inc, Karting Tasmania Inc, Australian Karting Association (NT) Inc, Australian Karting Association Queensland T/A Karting Queensland), Clubs, Individual Members, Affiliate Members, Life Members, committee members, trustees, license holders, officials, instructors/coaches, employees and volunteer workers, the CEO, the Board and Management of KA, promoters, organisers, sponsors, owners, contractors, lessees and licensees of the land, and respective servants and agents. WARNING: If you participate in these activities your rights to sue the supplier under the Australian Consumer Law and Fair Trading Act 2012 if you are killed or injured because the activities were not supplied with due care and skill or were not reasonably fit for their purpose, are excluded, restricted or modified in the way set out in or on this sign. NOTE: The change to your rights, as set out in or on this sign, does not apply if your death or injury is due to gross negligence on the supplier's part. Gross negligence, in relation to an act or omission, means doing the act or omitting to do an act with reckless disregard, with or without consciousness, for the consequences of the act or omission. See regulation 5 of the Australian Consumer Law and Fair Trading Regulations 2022 and section 22(3)(b) of the Australian Consumer Law and Fair Trading Act 2012.
Warning Sign - Portrait Must measure at least 1.2 metres x 1.8 metres in size Either Landscape or Portrait style signs can be used. **NOTE: Artwork is at 50% size – signwriter needs to increase to 100% before printing to ensure QR code works.** **All states Except Victoria**	 Code of Conduct **WARNING** **Kart Racing Is Dangerous** **Terms and Conditions of Entry** By entering this venue, you agree to comply with Karting Australia's policies, including its **Code of Conduct**, which applies to all entrants. Failure to comply with the Code of Conduct (available on KA's website or via the above QR Code) may result in, among other things, removal from this venue as well as temporary or permanent bans from attending Karting Activities or race Meetings. Australian Karting Association Ltd. T/A Karting Australia and its affiliates ("**KA**") is in the business of providing recreational services that relate to the sport of go karting, including official and private practice, come and try days, demonstrations, displays and race competition ("**Business**"). By entering the Venue any Attendee is at risk of death or of suffering personal injury (both physical and psychological) or loss and damage to property ("**Harm**") arising from KA conducting its Business. Each Attendee releases and indemnifies KA and holds it harmless with respect to all liability for death, personal injury and all other loss and damage, including damage to property howsoever arising, except to the extent prohibited by law. The Attendee voluntarily entered the Venue at its own risk and knows that go karting is a potentially dangerous activity. Affiliates of KA include, but are not limited to its Member States (organisations including Karting Australia (New South Wales) Inc, Karting (WA) Inc, Victorian Karting Association Inc, Australian Karting Association (SA) Inc, Karting Tasmania Inc, Australian Karting Association (NT) Inc, Australian Karting Association Queensland T/A Karting Queensland), Clubs, Individual Members, Affiliate Members, Life Members, committee members, trustees, license holders, officials, instructors/coaches, employees and volunteer workers, the CEO, the Board and Management of KA, promoters, organisers, sponsors, owners, contractors, lessees and licensees of the land, and respective servants and agents.

Warning Sign - Portrait

Victoria

Note: there is additional wording for Victoria only that is a State Government requirement.

Must measure at least 1.2 metres x 1.8 metres in size

Either Landscape or Portrait style signs can be used.

NOTE: Artwork is at 50% size – signwriter needs to increase to 100% before printing to ensure QR code works.

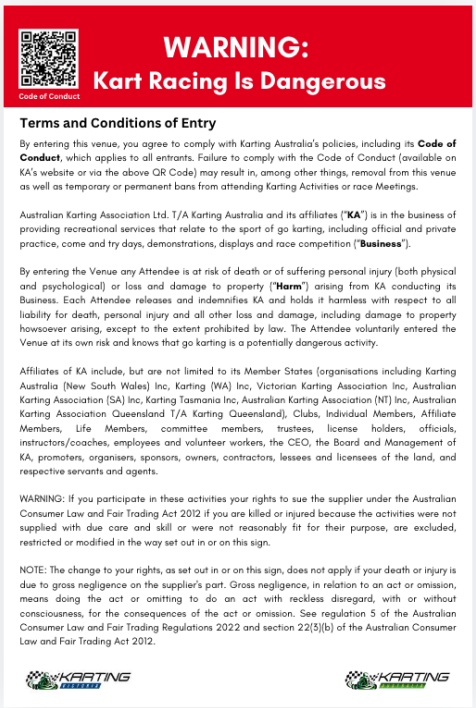

Code of Conduct

WARNING:
Kart Racing Is Dangerous

Terms and Conditions of Entry

By entering this venue, you agree to comply with Karting Australia's policies, including its **Code of Conduct**, which applies to all entrants. Failure to comply with the Code of Conduct (available on KA's website or via the above QR Code) may result in, among other things, removal from this venue as well as temporary or permanent bans from attending Karting Activities or race Meetings.

Australian Karting Association Ltd. T/A Karting Australia and its affiliates ("**KA**") is in the business of providing recreational services that relate to the sport of go karting, including official and private practice, come and try days, demonstrations, displays and race competition ("**Business**").

By entering the Venue any Attendee is at risk of death or of suffering personal injury (both physical and psychological) or loss and damage to property ("**Harm**") arising from KA conducting its Business. Each Attendee releases and indemnifies KA and holds it harmless with respect to all liability for death, personal injury and all other loss and damage, including damage to property howsoever arising, except to the extent prohibited by law. The Attendee voluntarily entered the Venue at its own risk and knows that go karting is a potentially dangerous activity.

Affiliates of KA include, but are not limited to its Member States (organisations including Karting Australia (New South Wales) Inc, Karting (WA) Inc, Victorian Karting Association Inc, Australian Karting Association (SA) Inc, Karting Tasmania Inc, Australian Karting Association (NT) Inc, Australian Karting Association Queensland T/A Karting Queensland), Clubs, Individual Members, Affiliate Members, Life Members, committee members, trustees, license holders, officials, instructors/coaches, employees and volunteer workers, the CEO, the Board and Management of KA, promoters, organisers, sponsors, owners, contractors, lessees and licensees of the land, and respective servants and agents.

WARNING: If you participate in these activities your rights to sue the supplier under the Australian Consumer Law and Fair Trading Act 2012 if you are killed or injured because the activities were not supplied with due care and skill or were not reasonably fit for their purpose, are excluded, restricted or modified in the way set out in or on this sign.

NOTE: The change to your rights, as set out in or on this sign, does not apply if your death or injury is due to gross negligence on the supplier's part. Gross negligence, in relation to an act or omission, means doing the act or omitting to do an act with reckless disregard, with or without consciousness, for the consequences of the act or omission. See regulation 5 of the Australian Consumer Law and Fair Trading Regulations 2022 and section 22(5)(b) of the Australian Consumer Law and Fair Trading Act 2012.

Karting Activity Including Private Practice Rules Sign

Must be on display at the Out Grid

Must measure at least 1.8 metres x 1.2 metres in size

NOTE: Artwork is at 50% size – signwriter needs to increase to 100% before printing to ensure QR code works.

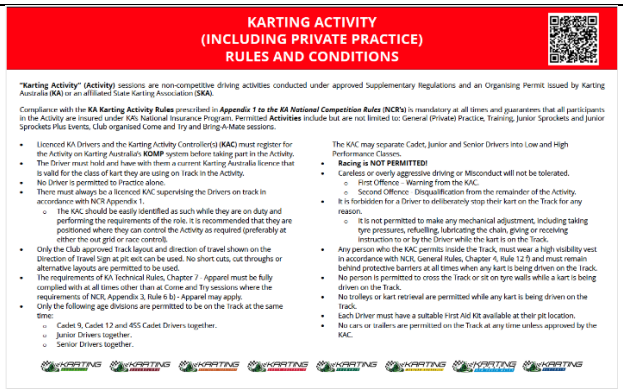

KARTING ACTIVITY
(INCLUDING PRIVATE PRACTICE)
RULES AND CONDITIONS

"**Karting Activity**" (**Activity**) sessions are non-competitive driving activities conducted under approved Supplementary Regulations and an Organising Permit issued by Karting Australia (**KA**) or an affiliated State Karting Association (**SKA**).

Compliance with the **KA Karting Activity Rules** prescribed in ***Appendix 1 to the KA National Competition Rules*** (**NCR's**) is mandatory at all times and guarantees that all participants in the Activity are insured under KAs National Insurance Program. Permitted **Activities** include but are not limited to: General (Private) Practice, Training, Junior Sprockets and Junior Sprockets Plus Events, Club organised Come and Try and Bring-A-Mate sessions.

- Licenced KA Drivers and the Karting Activity Controller(s) (**KAC**) must register for the Activity on Karting Australia's **KOMP** system before taking part in the Activity.
- The Driver must hold and have with them a current Karting Australia licence that is valid for the class of kart they are using on Track in the Activity.
- No Driver is permitted to Practice alone.
- There must always be a licenced KAC supervising the Drivers on track in accordance with NCR Appendix 1.
  - The KAC should be easily identified as such while they are on duty and performing the requirements of the role. It is recommended that they are positioned where they can control the Activity as required (preferably at either the out grid or race control).
- Only the Club approved Track layout and direction of travel shown on the Direction of Travel Sign at pit exit can be used. No short cuts, cut throughs or alternative layouts are permitted to be used.
- The requirements of KA Technical Rules, Chapter 7 - Apparel must be fully complied with at all times other than at Come and Try sessions where the requirements of NCR, Appendix 3, Rule 6 b) - Apparel may apply.
- Only the following age divisions are permitted to be on the Track at the same time:
  - Cadet 9, Cadet 12 and 4SS Cadet Drivers together.
  - Junior Drivers together.
  - Senior Drivers together.

The KAC may separate Cadet, Junior and Senior Drivers into Low and High Performance Classes.

- **Racing is NOT PERMITTED!**
- Careless or overly aggressive driving or Misconduct will not be tolerated.
  - First Offence - Warning from the KAC.
  - Second Offence - Disqualification from the remainder of the Activity.
- It is forbidden for a Driver to deliberately stop their kart on the Track for any reason.
  - It is not permitted to make any mechanical adjustment, including taking tyre pressures, refuelling, lubricating the chain, giving or receiving instruction to or by the Driver while the kart is on the Track.
- Any person who the KAC permits inside the Track, must wear a high visibility vest in accordance with NCR, General Rules, Chapter 4, Rule 12 f) and must remain behind protective barriers at all times when any kart is being driven on the Track.
- No person is permitted to cross the Track or sit on tyre walls while a kart is being driven on the Track.
- No trolleys or kart retrieval are permitted while any kart is being driven on the Track.
- Each Driver must have a suitable First Aid Kit available at their pit location.
- No cars or trailers are permitted on the Track at any time unless approved by the KAC.

One Way Direction of Travel Signs

Minimum 450mm x 600mm in size

NOTE: Only one (1) must be displayed at any time to indicate the only direction in which a kart is permitted to be driven on the Track.

Flags Sign Must measure at least 1.8 metres x 1.2 metres in size **Recommended** for the Out Grid	
Parc Ferme Sign Minimum 300mm high, 450mm long Required at all entrances to the Parc Ferme area	
Formation Line Sign Minimum 600mm wide & 900mm high EACH SIDE Made of corflute with longer ends that can be folded to form base of triangle & weighted: 2 required when in use Recommended for positioning on verge at each end of Formation Line	
Fire Extinguisher Sign 450mm high, 300mm wide Number and position as per Clause 8	

Keep Out Sign Minimum 300mm high, 450mm long Positioned at all entrances to prohibited areas (such as Parc Ferme)	
No Smoking or Vaping Sign Minimum 300mm high, 450mm long Positioned at key points near fuel and at multiple positions around paddock	
Covered Footwear Sign Minimum 450mm high, 300mm wide At all entrances to areas where this is a requirement (such as Out Grid)	

Appendix A Diagrams

KERB - INSIDE

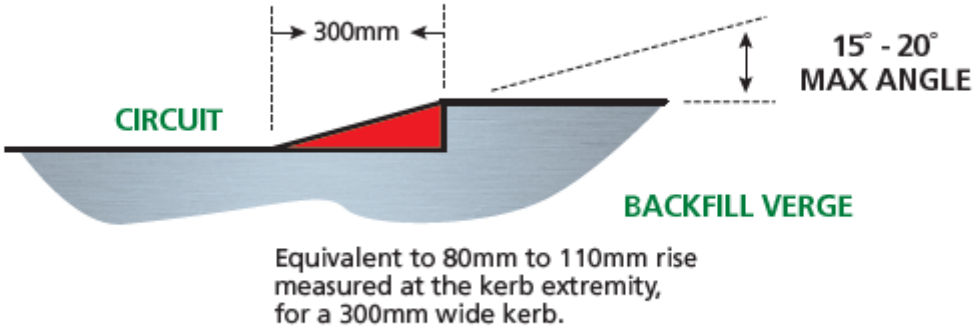

KERB - OUTSIDE

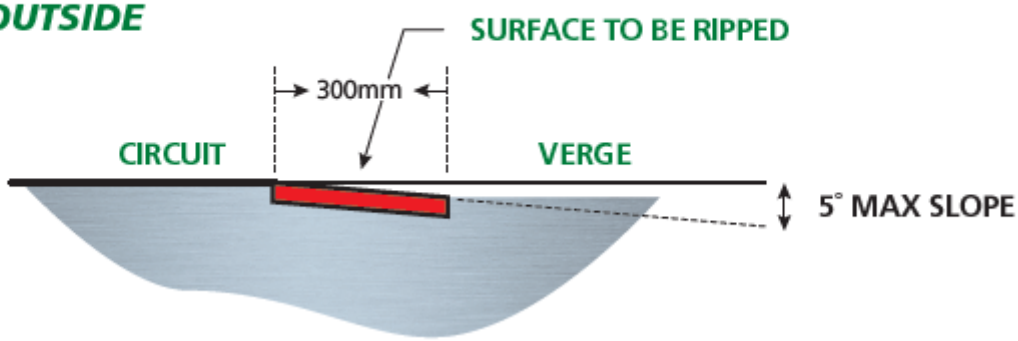

FENCING

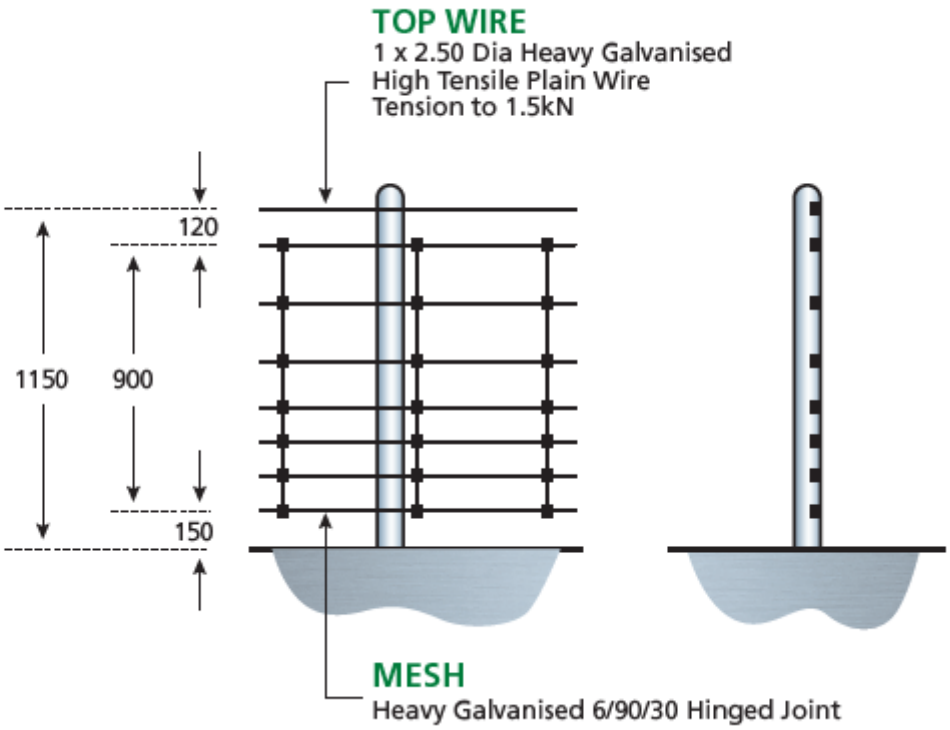

CIK RIPPLE STRIP

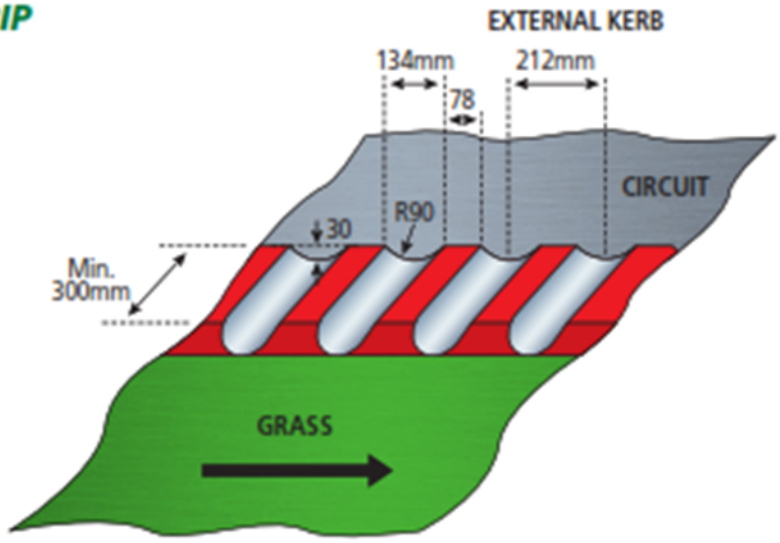

A

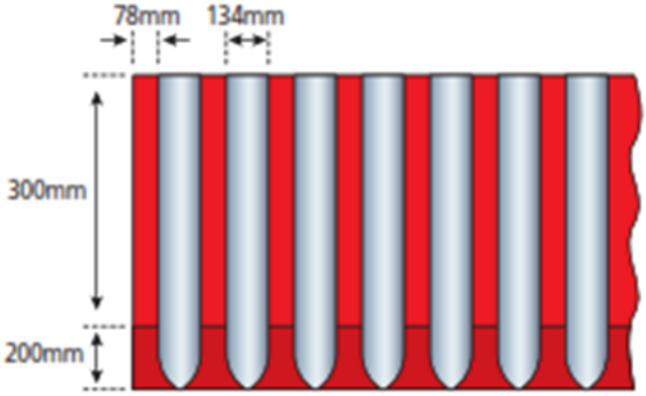

B

A-B

CIK (FIA Karting) OUTSIDE KERB

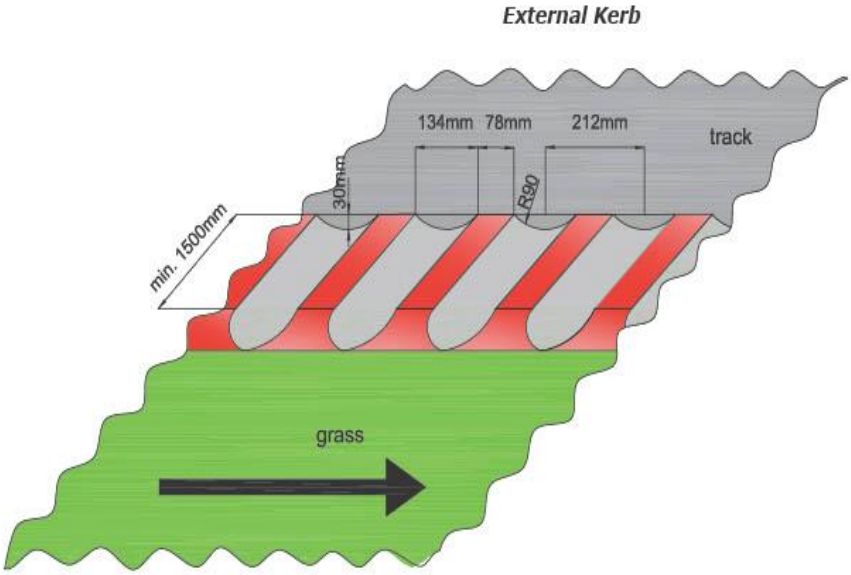

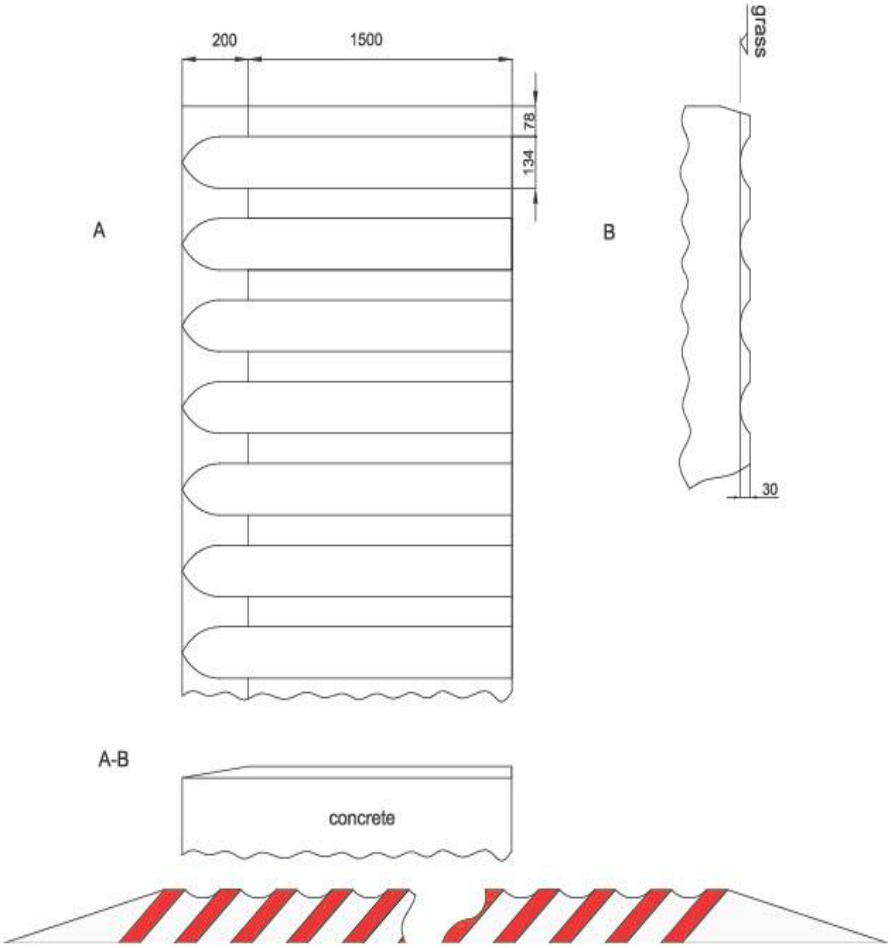

Note: mandatory for new circuits (first homologation of circuit). For all other circuits, acceptance of non-conformity has to be decided by the inspector.

CIK (FIA Karting) INSIDE KERB

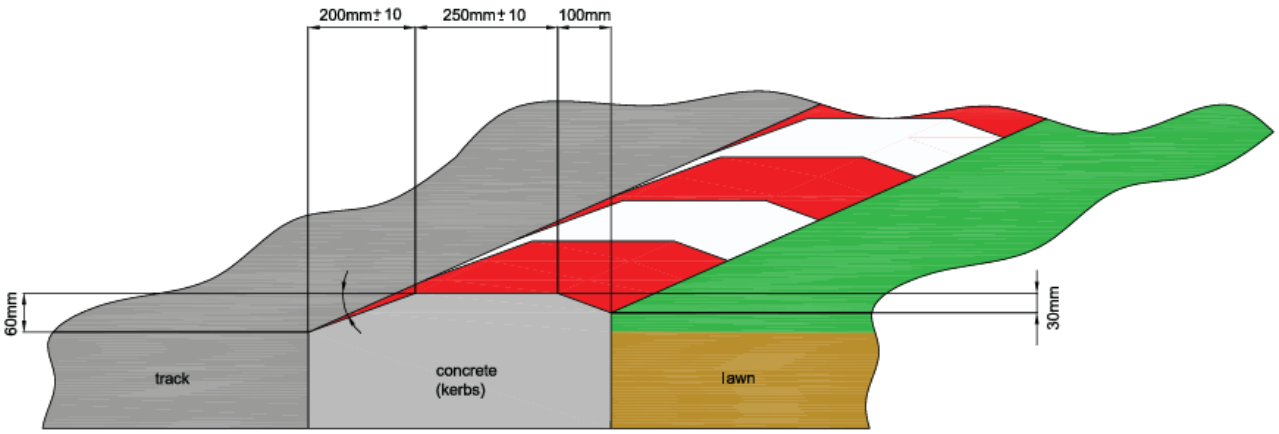

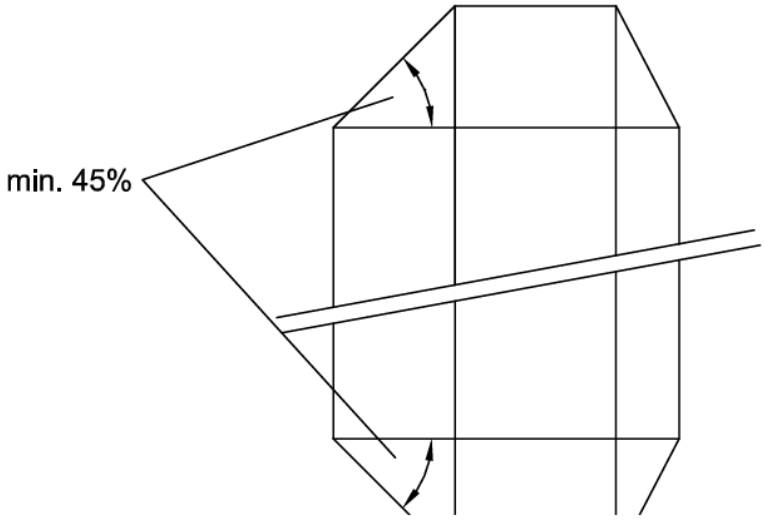

Beginning and end of the edge.

Kerbs must be painted in two colours alternately (recommended colours: red and white). Kerbs should be continually checked for damage. Broken kerbs should be repaired/replaced immediately.

Note: mandatory for new circuits (first homologation of circuit). For all other circuits, acceptance of non-conformity has to be decided by either the National Circuit Inspector or the State Circuit Inspector.

HERRINGBONE GRID FORMAT 40 Kart Grid Herringbone Pattern

Note: Due to different Out Grid dimensions from Circuit to Circuit, alternative angles can be submitted to KA National Circuit Inspector or their delegate for approval. Width of each kart's allocated space must be no less than 2m and central space for all karts to drive out must be no less than 2.5m.

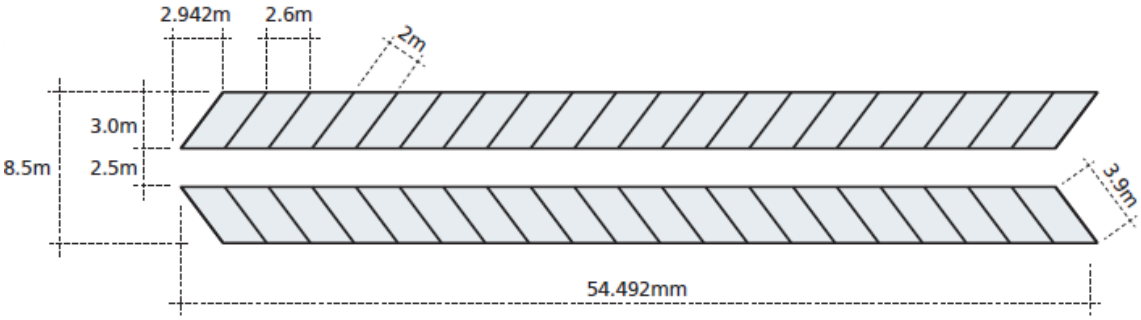

Herringbone configuration may be altered to suit conditions at each Circuit, but such alterations must be approved by the KA National Circuit Inspector or their delegate.

STARTING GRID

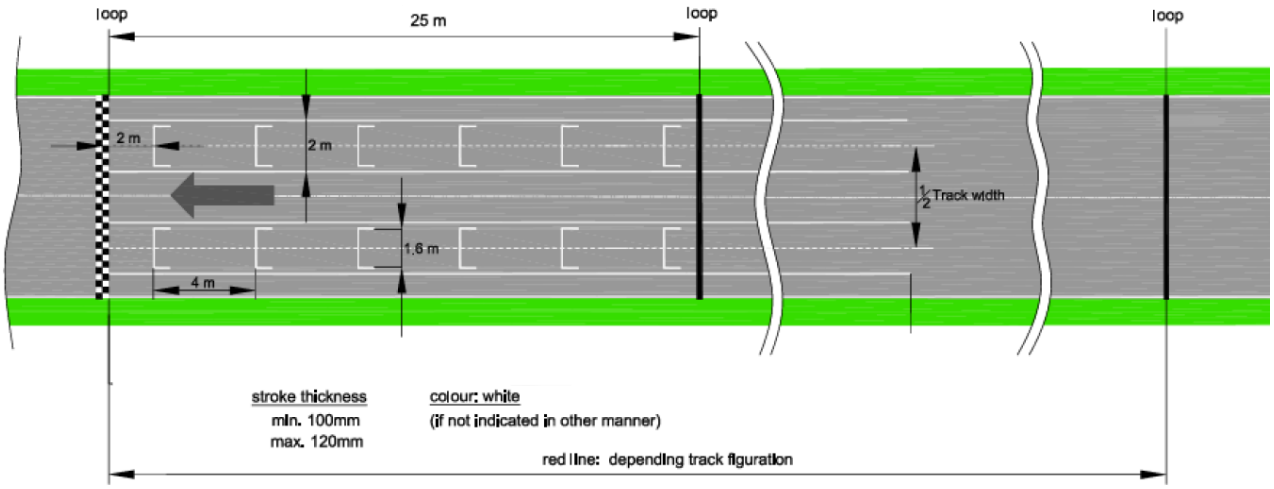

Additional timing loops are not compulsory.

Stroke Thickness
minimum 100 mm
maximum 120 mm
Colour: white
(if not indicated in other manner)

Red line: depending on track configuration

Paint with anti-skid additive (e.g.: silica powder)

Australian Karting Association Ltd.
T/A Karting Australia
Unit 6, 27 Ford Rd., COOMERA, Qld. 4209
Email: admin@Karting.net.au
Web: karting.net.au